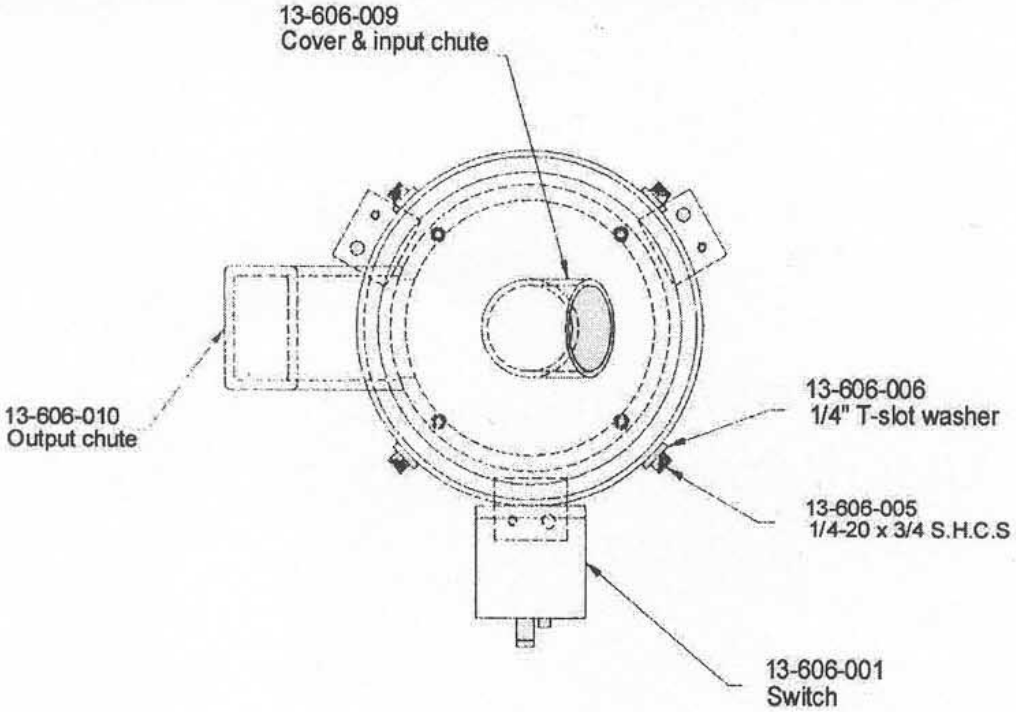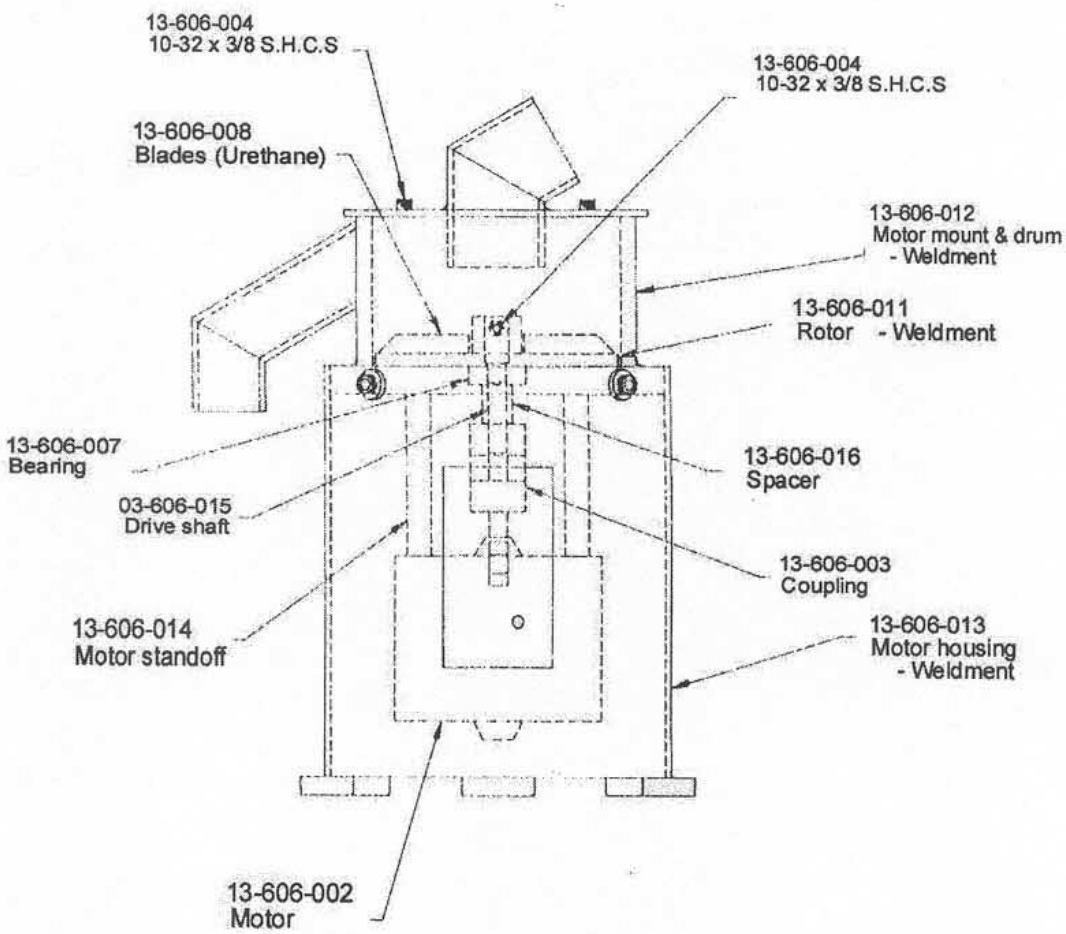Model 606 Spring Untangler
Parts List